Adder

Adder

- Review 01_numbers.ppt

اعمال رياضي باينري: جمع

- قوانين: مانند جمع دسيمال
- با اين تفاوت كه 10 = 1+1 ← توليد نقلي
  - 0+0 = 0c0 (sum 0 with carry 0)
  - 0+1 = 1+0 = 1c0
  - 1+1 = 0c1
  - 1+1+1 = 1c1

```
  +1 +1     +1
   1 0 1 1 0 1
+  0 1 1 0 0 1
-------------
 1 0 0 0 1 1 0
```

Carry	1	1	1	1	1	0
Augend	0	0	1	0	0	1
Addend	0	1	1	1	1	1
Result	1	0	1	0	0	0

نمایش اعداد

$N^* = 2^n - N$

مکمل و:

Example: Twos complement of 7

$2^4 = 10000$

sub 7 = 0111

1001 = repr. of -7

Example: Twos complement of -7

$2^4 = 10000$

sub -7 = 1001

0111 = repr. of 7

Shortcut method:

Twos complement = bitwise complement + 1

0111 -> 1000 + 1 -> 1001 (representation of -7)

1001 -> 0110 + 1 -> 0111 (representation of 7)

جمع و تفريق
مكمل 2

4	0100	-4	1100
+ 3	0011	+ (-3)	1101
7	0111	-7	11001

If
(carry-in to sign = carry-out)
then ignore carry

if
(carry-in ≠ carry-out)
then overflow

4	0100	-4	1100
- 3	1101	+ 3	0011
1	10001	-1	1111

Simpler addition scheme makes twos complement the most common choice for integer number systems within digital systems

Overflow Conditions

سرریز

Add two positive numbers to get a negative number

or two negative numbers to get a positive number

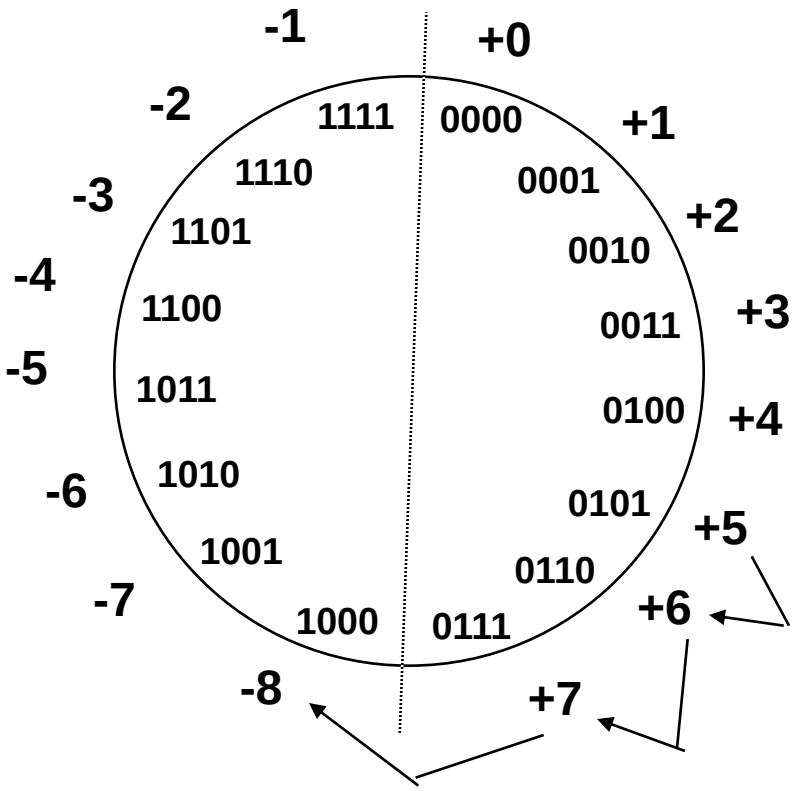

5 + 3 = -8

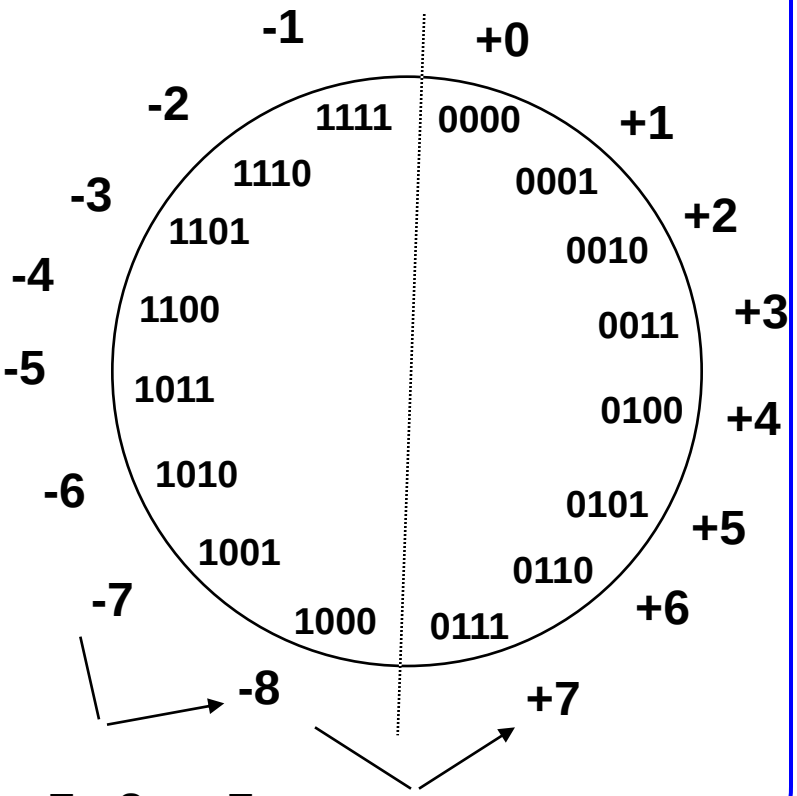

-7 - 2 = +7

Overflow Conditions

سرریز

	0 1 1 1
5	0 1 0 1
3	0 0 1 1
-8	1 0 0 0

Overflow

	1 0 0 0
-7	1 0 0 1
-2	1 1 0 0
7	1 0 1 1 1

Overflow

	0 0 0 0
5	0 1 0 1
2	0 0 1 0
7	0 1 1 1

No overflow

	1 1 1 1
-3	1 1 0 1
-5	1 0 1 1
-8	1 1 0 0 0

No overflow

Overflow when carry in to sign ≠ carry out

Half Adder (HA)

- Add single bits

Ai	Bi	Sum	Carry
0	0	0	0
0	1	1	0
1	0	1	0
1	1	0	1

Bi \ Ai	0	1
0	0	1
1	1	0

Bi \ Ai	0	1
0	0	0
1	0	1

$$\text{Sum} = \overline{Ai}\,Bi + Ai\,\overline{Bi}$$

$$= Ai \oplus Bi$$

$$\text{Carry} = Ai \,.\, Bi$$

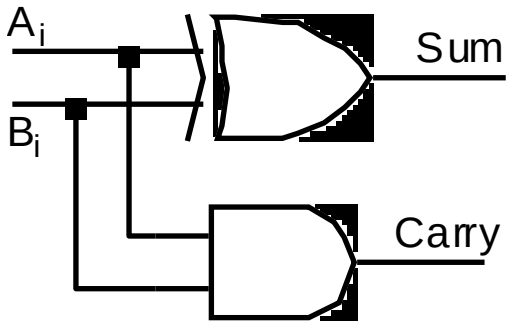

Full Adder

- Add multiple bits

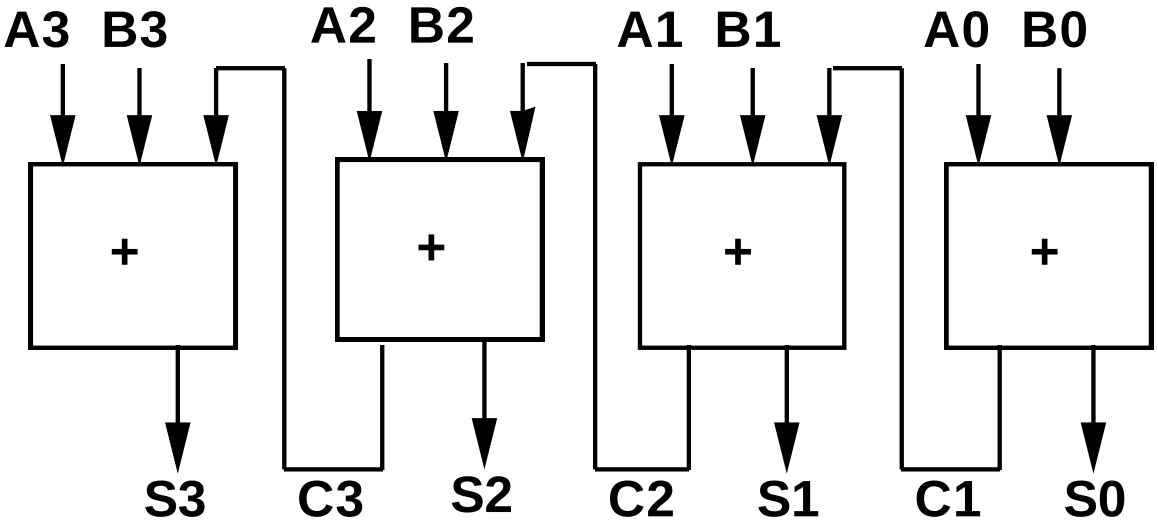

Full Adder (FA)

A	B	C_I	S	C_O
0	0	0	0	0
0	0	1	1	0
0	1	0	1	0
0	1	1	0	1
1	0	0	1	0
1	0	1	0	1
1	1	0	0	1
1	1	1	1	1

S

C_I \ A B	00	01	11	10
0	0	1	0	1
1	1	0	1	0

C_O

C_I \ A B	00	01	11	10
0	0	0	1	0
1	0	1	1	1

$S = C_I \text{ xor } A \text{ xor } B$

$C_O = B\,C_I + A\,C_I + A\,B = C_I\,(A + B) + A\,B$

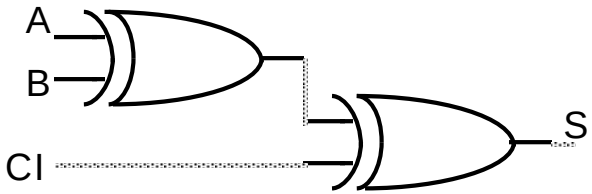

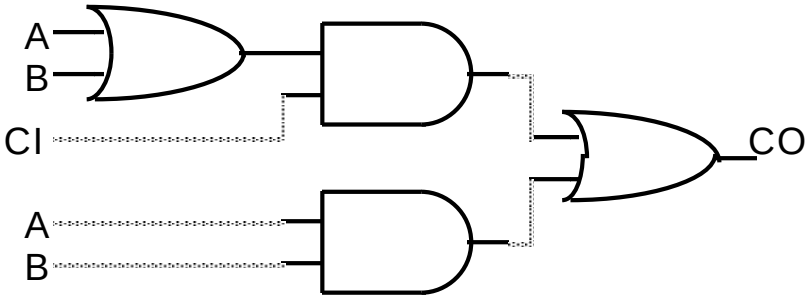

Full Adder Using 2 Half Adders

- A full adder can also be realized with two half adders and an OR gate, since C_{i+1} can also be expressed as:
- $C_{i+1} = A_iB_i + (Ai \oplus B_i)C_i$

and $S_i = (A_i \oplus B_i) \oplus C_i$

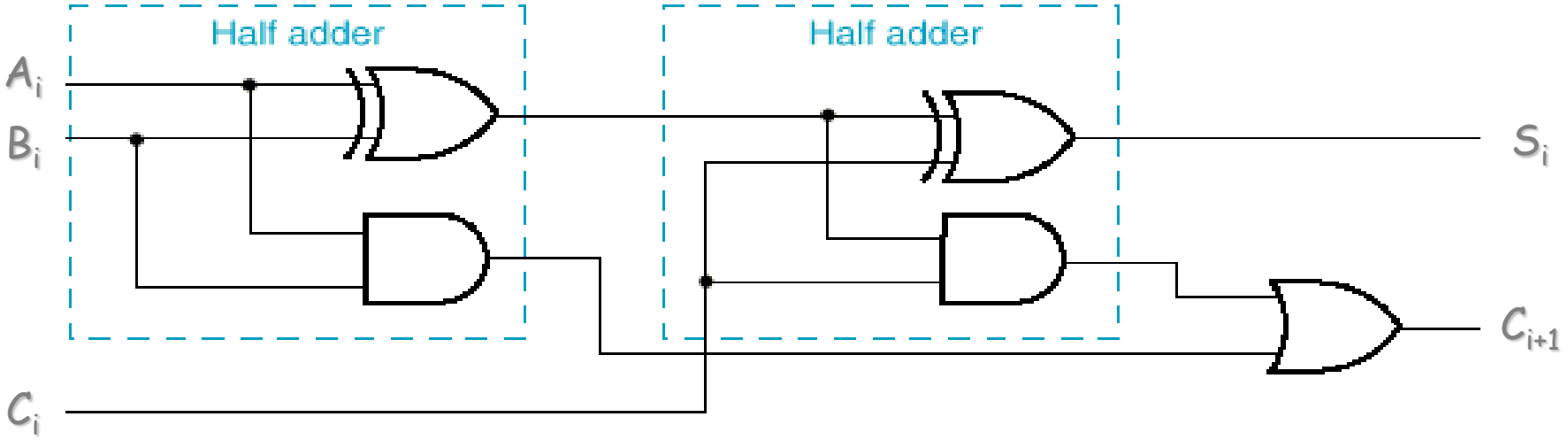

Example: 4-bit Ripple Carry Adder

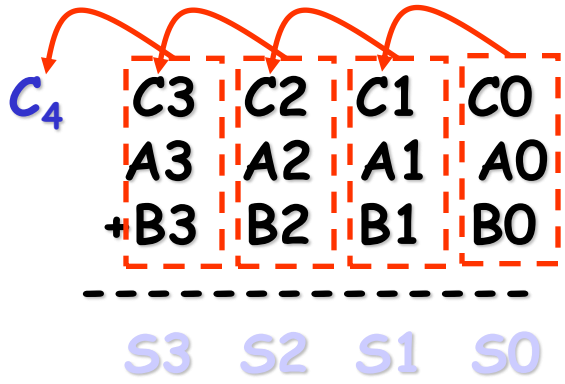

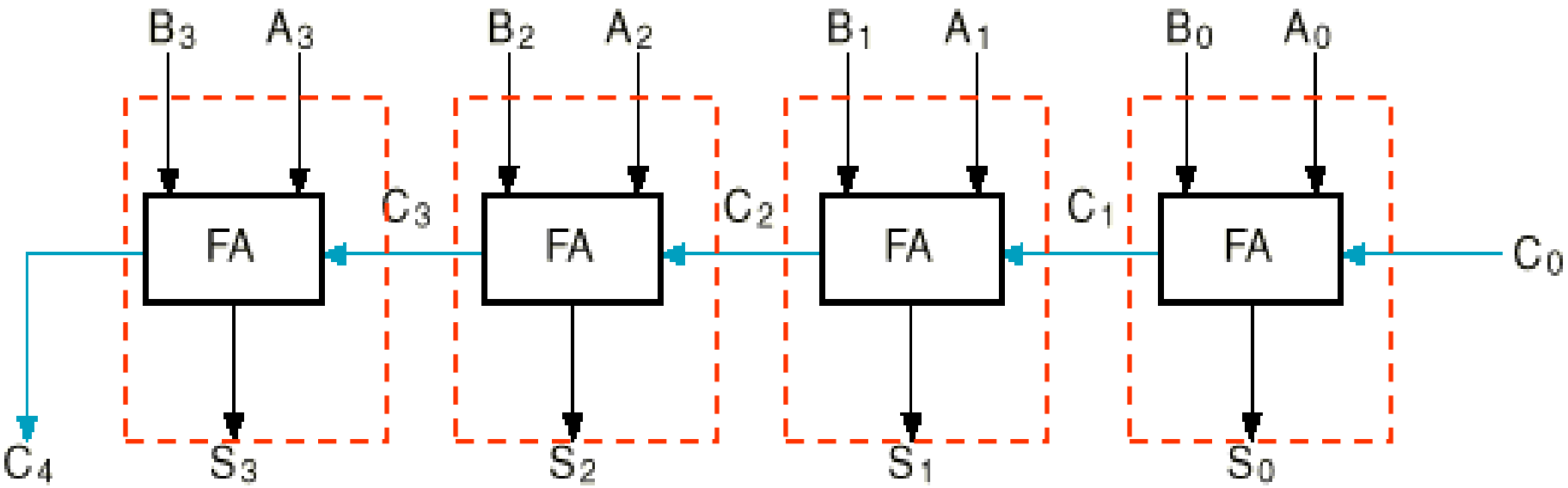

Delay Analysis of Ripple Adder

- Carry out of a single stage can be implemented in 2 gate delays after CI is ready.

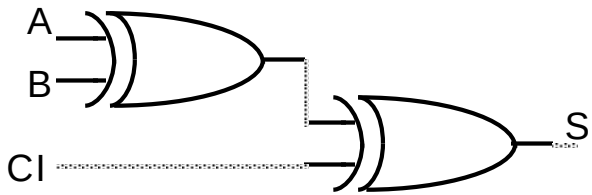

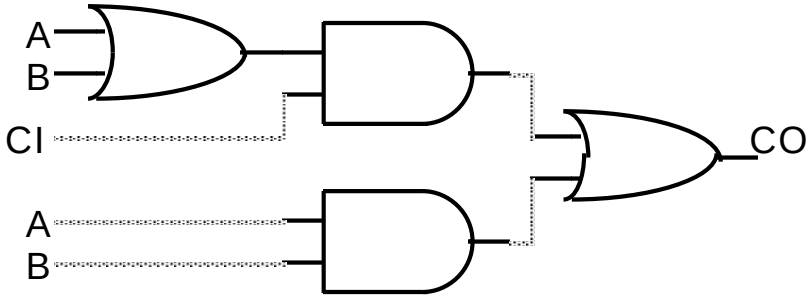

- For a 16 bit adder, the 16th bit carry is generated after about 16 * 2 = 32 gate delays.
- The sum bit takes one additional gate delay to generate the sum of the 16th bit after 15th bit carry
  - ~ 15 * 2 + 1 = 31 gate delays
- Takes too long - need to investigate FASTER adders!

Delay Analysis of Ripple Adder

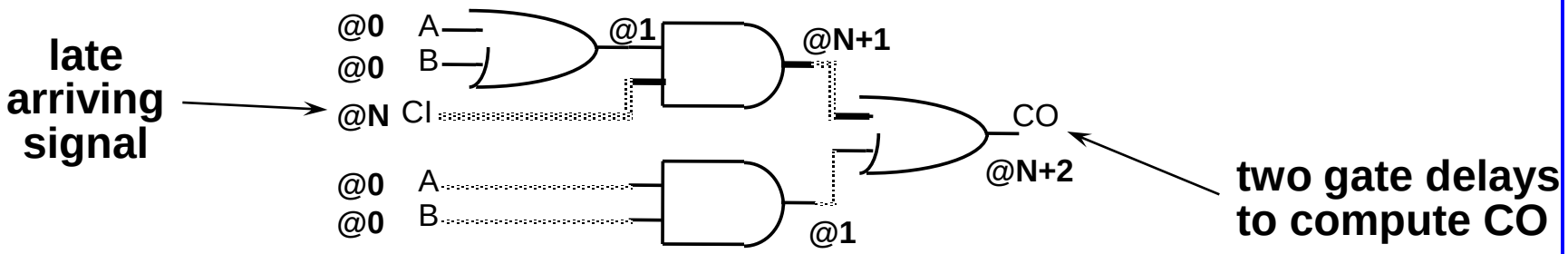

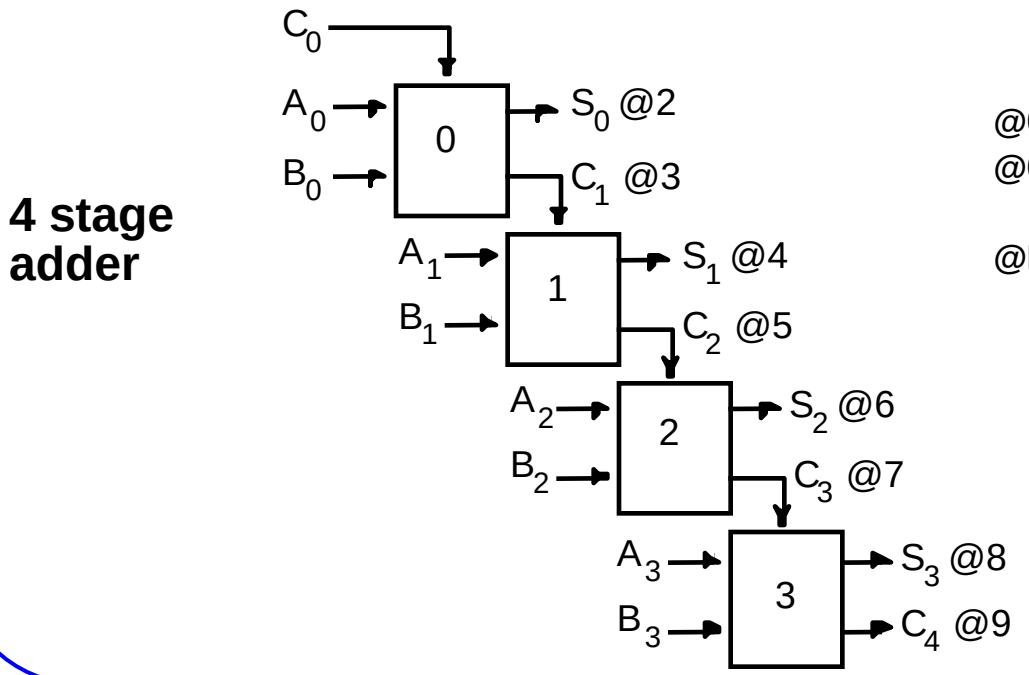

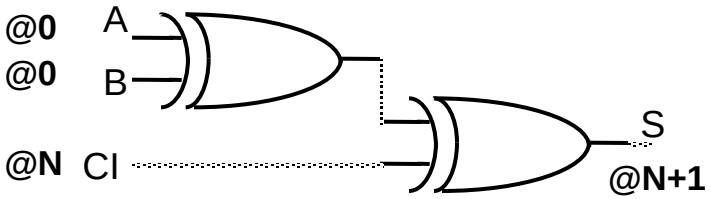

Carry Lookahead Adder

- **Carry Generate**
  - **Gi = Ai Bi** *must generate carry when A = B = 1*
- **Carry Propagate**
  - **Pi = Ai xor Bi** *carry-in will equal carry-out here*

- ***Sum and Carry can be reexpressed in terms of generate/propagate:***

$$Si = Ai \text{ xor } Bi \text{ xor } Ci = Pi \text{ xor } Ci$$

$$Ci{+}1 = Ai\ Bi + Ai\ Ci + Bi\ Ci$$

$$= Ai\ Bi + Ci\ (Ai + Bi)$$

$$= Ai\ Bi + Ci\ (Ai \text{ xor } Bi)$$

$$= Gi + Ci\ Pi$$

Carry Lookahead Adder

$$C1 = G0 + P0\ C0$$

$$\begin{aligned} C2 &= G1 + P1\ C1 \\ &= G1 + P1\ (G0 + P0\ C0) \\ &= G1 + P1\ G0 + P1\ P0\ C0 \end{aligned}$$

$$\begin{aligned} C3 &= G2 + P2\ C2 \\ &= G2 + P2\ (G1 + P1\ G0 + P1\ P0\ C0) \\ &= G2 + P2\ G1 + P2\ P1\ G0 + P2\ P1\ P0\ C0 \end{aligned}$$

$$\begin{aligned} C4 &= G3 + P3\ C3 \\ &= G3 + P3\ G2 + P3\ P2\ G1 + P3\ P2\ P1\ G0 + P3\ P2\ P1\ P0\ C0 \end{aligned}$$

- Each of the carry equations can be implemented in a two-level logic network
- Variables are the adder inputs and carry in to stage 0!

CLA

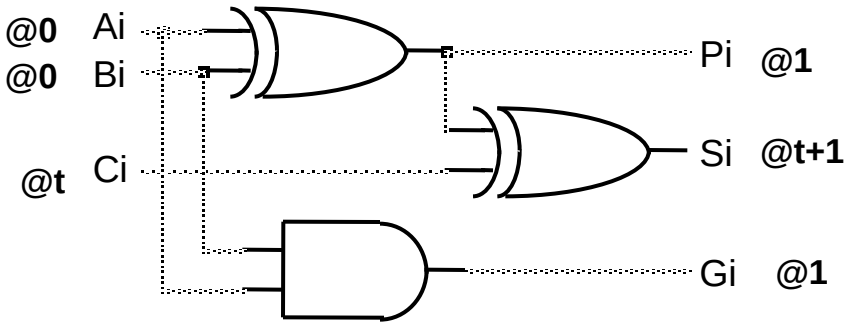

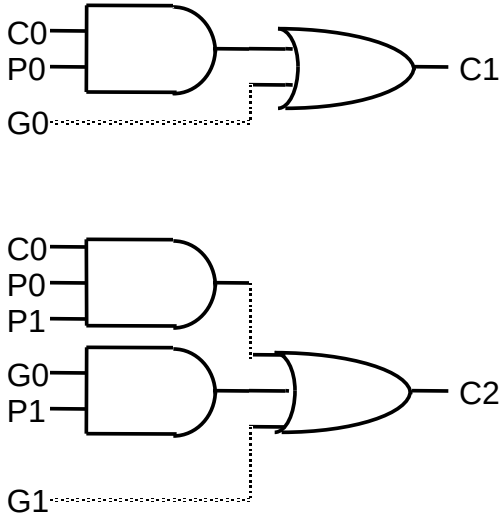

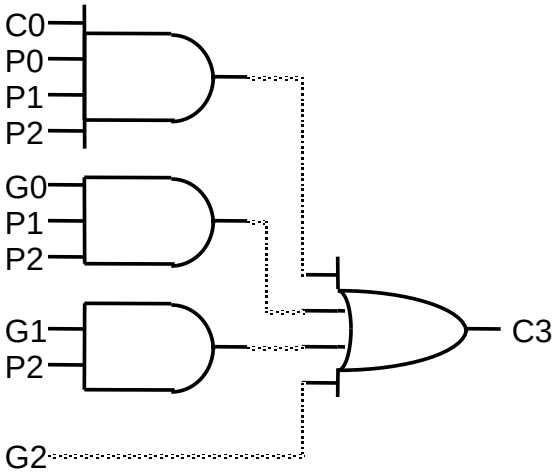

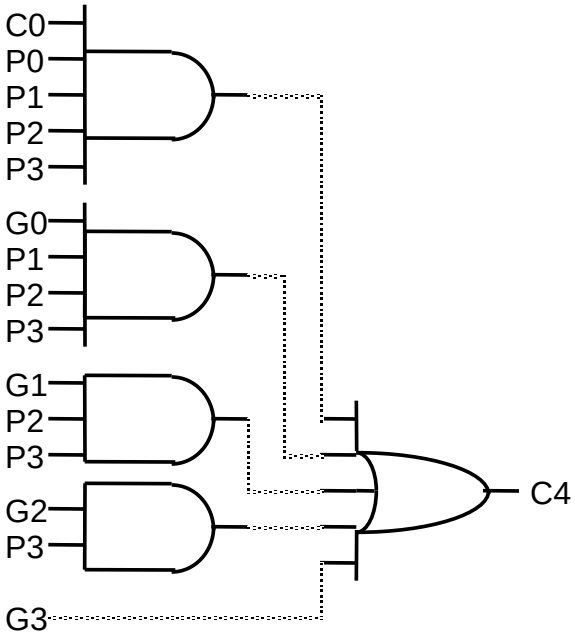

- Increasingly complex logic

Delay Analysis of CLA

- Ci's are generated independent of N

4 stage adder

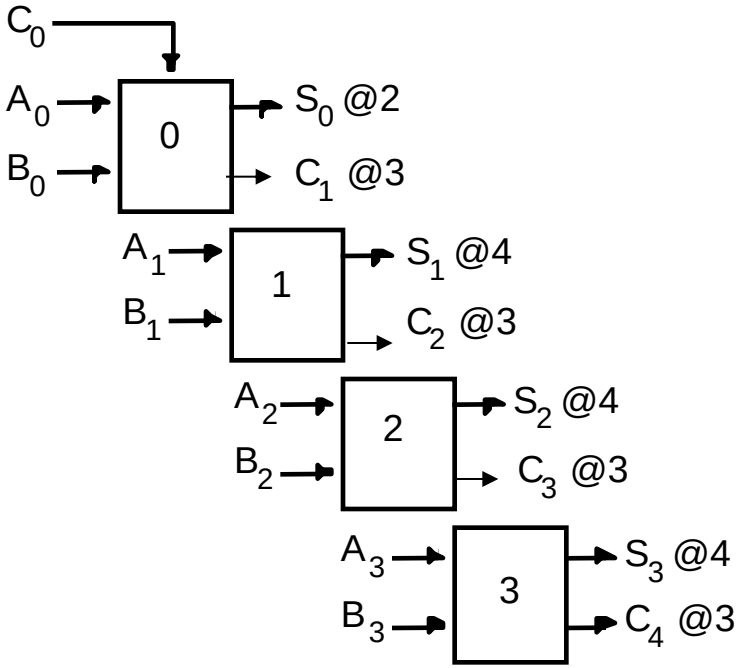

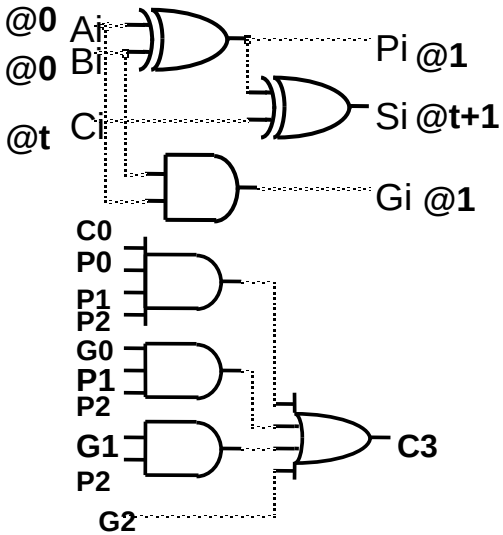

final sum and carry

- NOTE: This assumes all gate delay are same.
- Not true, delays depend on fan-ins and fan-out

Cascaded CLA

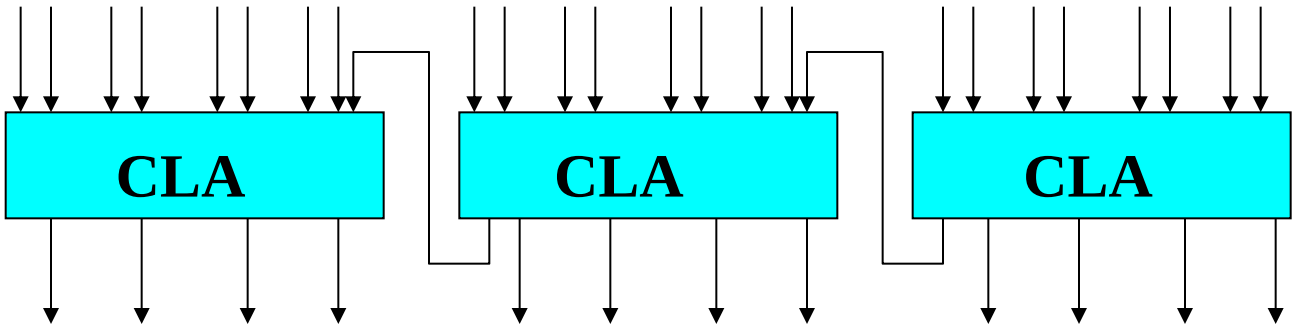

Adder/Subtractor

A - B = A + (-B) = A + B’ + 1

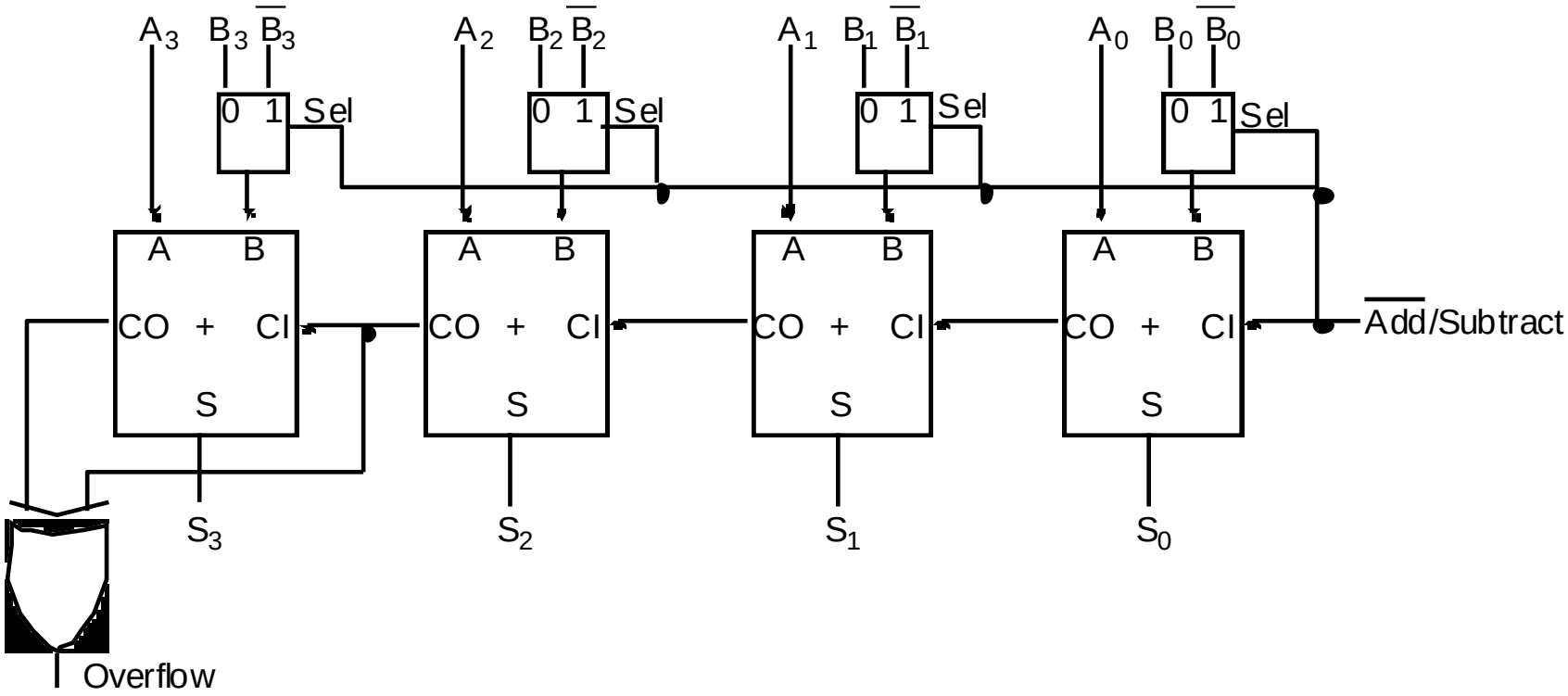

4-bit Binary Adder/Subtractor (cont.)

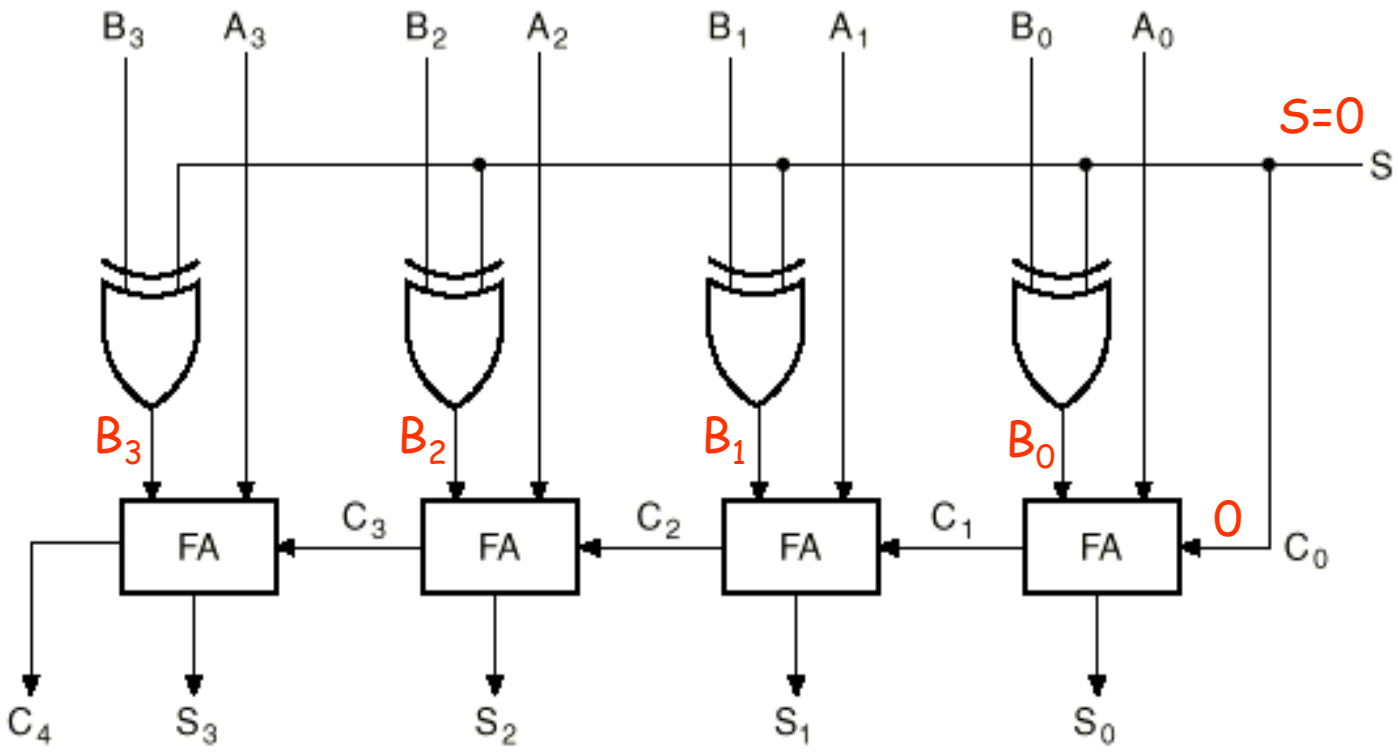

S=0 selects addition

4-bit Binary Adder/Subtractor (cont.)

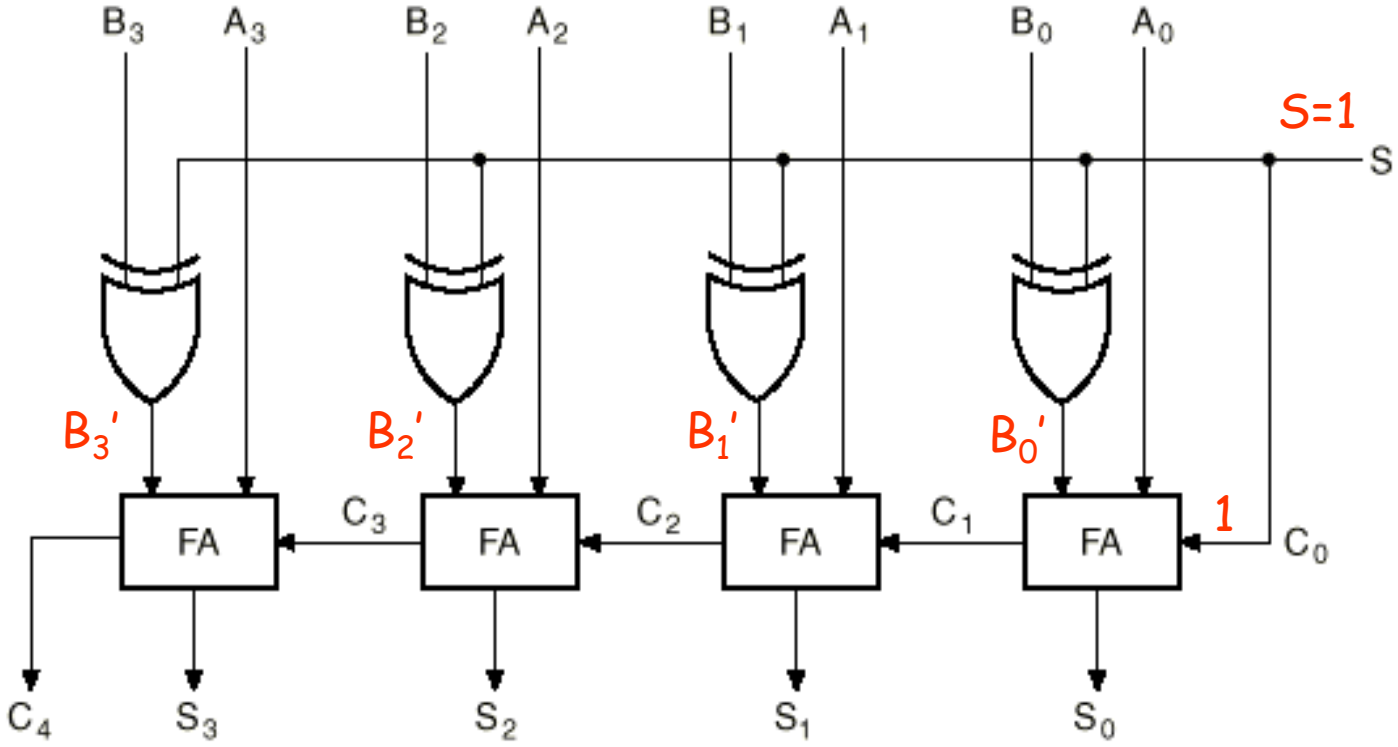

S=1 selects subtraction

Overflow

- Overflow can occur ONLY when both numbers have the same sign.

- This condition can be detected when the carry out (C_n) is <u>different</u> than the carry at the previous position (C_{n-1}).

The Overflow problem in Signed-2's Complement (cont.)

- **Example 1: $M=65_{10}$ and $N=65_{10}$ (In an 8-bit 2's complement system).**
  - $M = N = 01000001_2$
  - $M+N = 10000010$ with $C_n=0$. (clearly wrong!)
  - Bring C_n as the MSB to get 010000010_2 (130_{10}) which is correct, but requires 9-bits → overflow occurs.
- **Example 2: $M=-65_{10}$ and $N=-65_{10}$**
  - $M = N = 10111111_2$
  - $M+N = 01111110$ with $C_n=1$. (wrong again!)
  - Bring C_n as the MSB to get 101111110_2 (-130_{10}) which is correct, but also requires 9-bits → overflow occurs.

Overflow Detection in Signed-2's Complement

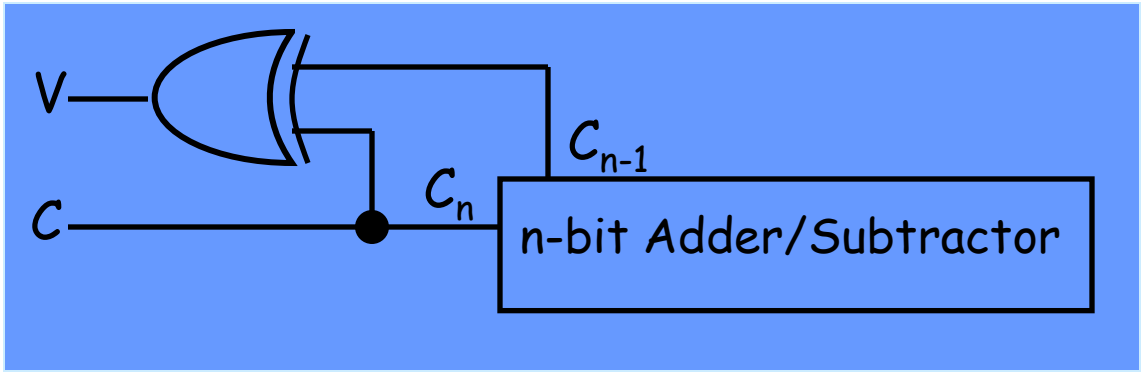

- C =1 indicates overflow condition when adding/subtr. unsigned numbers.
- V=1 indicates overflow condition when adding/subtr. signed-2's complement numbers

2x2-bit Multiplier

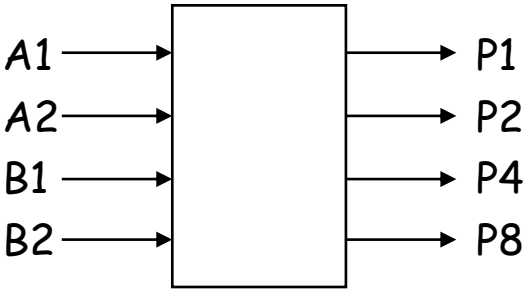

A2	A1	B2	B1	P8	P4	P2	P1
0	0	0	0	0	0	0	0
		0	1	0	0	0	0
		1	0	0	0	0	0
		1	1	0	0	0	0
0	1	0	0	0	0	0	0
		0	1	0	0	0	1
		1	0	0	0	1	0
		1	1	0	0	1	1
1	0	0	0	0	0	0	0
		0	1	0	0	1	0
		1	0	0	1	0	0
		1	1	0	1	1	0
1	1	0	0	0	0	0	0
		0	1	0	0	1	1
		1	0	0	1	1	0
		1	1	1	0	0	1

4-variable K-map for each of the 4 output functions

2x2-bit Multiplier (cont'd)

K-map for P8

0	0	0	0
0	0	0	0
0	0	1	0
0	0	0	0

A2, A1, B1, B2

P8 = A2A1B2B1

K-map for P4

P4 = A2B2B1'
+ A2A1'B2

0	0	0	0
0	0	0	0
0	0	0	1
0	0	1	1

A2, A1, B1, B2

K-map for P2

0	0	0	0
0	0	1	1
0	1	0	1
0	1	1	0

A2, A1, B1, B2

P2 = A2'A1B2
+ A1B2B1'
+ A2B2'B1
+ A2A1'B1

K-map for P1

P1 = A1B1

0	0	0	0
0	1	1	0
0	1	1	0
0	0	0	0

A2, A1, B1, B2

Multiplier

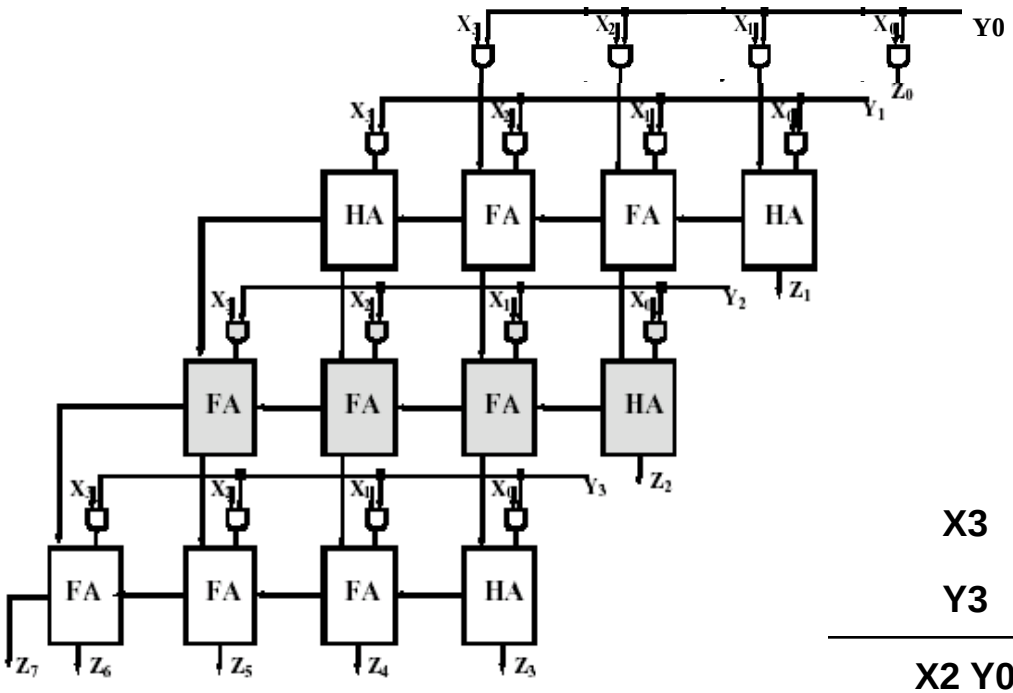

				X3	X2	X1	X0
				Y3	Y2	Y1	Y0
				X2 Y0	X2 Y0	X1 Y0	X0 Y0
			X3 Y1	X2 Y1	X1 Y1	X0 Y1	
		X3 Y2	X2 Y2	X1 Y2	X0 Y2		
	X3 Y3	X2 Y3	X1 Y3	X0 Y3			
Z7	Z6	Z5	Z4	Z3	Z2	Z1	Z0

4-Bit ALU

- **74181 TTL ALU**
  - Arithmetic-Logic Unit

Selection				M = 1	M = 0, Arithmetic Functions	
S3	S2	S1	S0	Logic Function	Cn = 0	Cn = 1
0	0	0	0	F = not A	F = A minus 1	F = A
0	0	0	1	F = A nand B	F = A B minus 1	F = A B
0	0	1	0	F = (not A) + B	F = A (not B) minus 1	F = A (not B)
0	0	1	1	F = 1	F = minus 1	F = zero
0	1	0	0	F = A nor B	F = A plus (A + not B)	F = A plus (A + not B) plus 1
0	1	0	1	F = not B	F = A B plus (A + not B)	F = A B plus (A + not B) plus 1
0	1	1	0	F = A xnor B	F = A minus B minus 1	F = (A + not B) plus 1
0	1	1	1	F = A + not B	F = A + not B	F = A minus B
1	0	0	0	F = (not A) B	F = A plus (A + B)	F = (A + not B) plus 1
1	0	0	1	F = A xor B	F = A plus B	F = A plus (A + B) plus 1
1	0	1	0	F = B	F = A (not B) plus (A + B)	F = A (not B) plus (A + B) plus 1
1	0	1	1	F = A + B	F = (A + B)	F = (A + B) plus 1
1	1	0	0	F = 0	F = A	F = A plus A plus 1
1	1	0	1	F = A (not B)	F = A B plus A	F = AB plus A plus 1
1	1	1	0	F = A B	F= A (not B) plus A	F = A (not B) plus A plus 1
1	1	1	1	F = A	F = A	F = A plus 1

4-Bit ALU

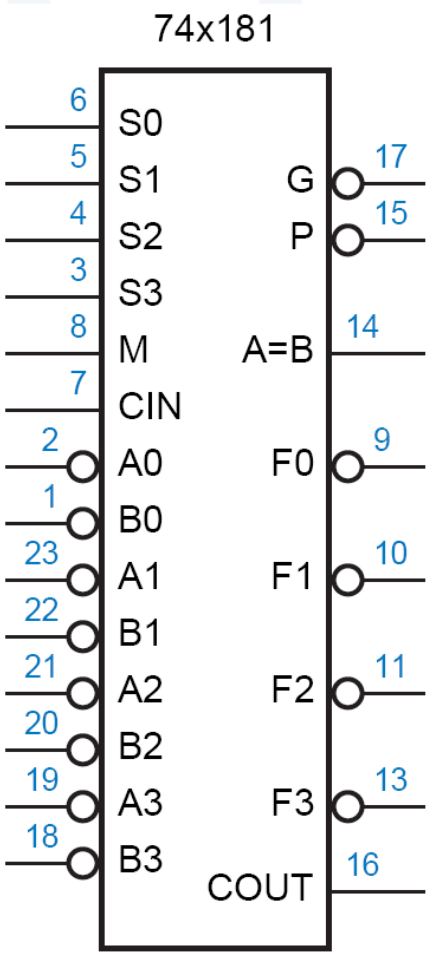
74x181
6
S0
5
S1
4
S2
3
S3
8
M
7
CIN
2
A0
1
B0
23
A1
22
B1
21
A2
20
B2
19
A3
18
B3
G
17
P
15
A=B
14
F0
9
F1
10
F2
11
F3
13
COUT
16

BCD Addition

Addition:

5 = 0101

3 = 0011

1000 = 8

5 = 0101

8 = 1000

1101 = 13!

Problem when digit sum exceeds 9

Solution: add 6 (0110) if sum exceeds 9!

5 = 0101

8 = 1000

1101

6 = 0110

1 0011 = 1 3 in BCD

9 = 1001

7 = 0111

1 0000 = 16 in binary

6 = 0110

1 0110 = 1 6 in BCD

اعداد در مبناهاي مختلف

Decimal (base 10)	Binary (base 2)	Octal (base 8)	Hexadecimal (base 16)
00	0000	00	0
01	0001	01	1
02	0010	02	2
03	0011	03	3
04	0100	04	4
05	0101	05	5
06	0110	06	6
07	0111	07	7
08	1000	10	8
09	1001	11	9
10	1010	12	A
11	1011	13	B
12	1100	14	C
13	1101	15	D
14	1110	16	E
15	1111	17	F

Add 0110 to sum whenever it exceeds 1001 (11XX or 1X1X)

BCD Adder

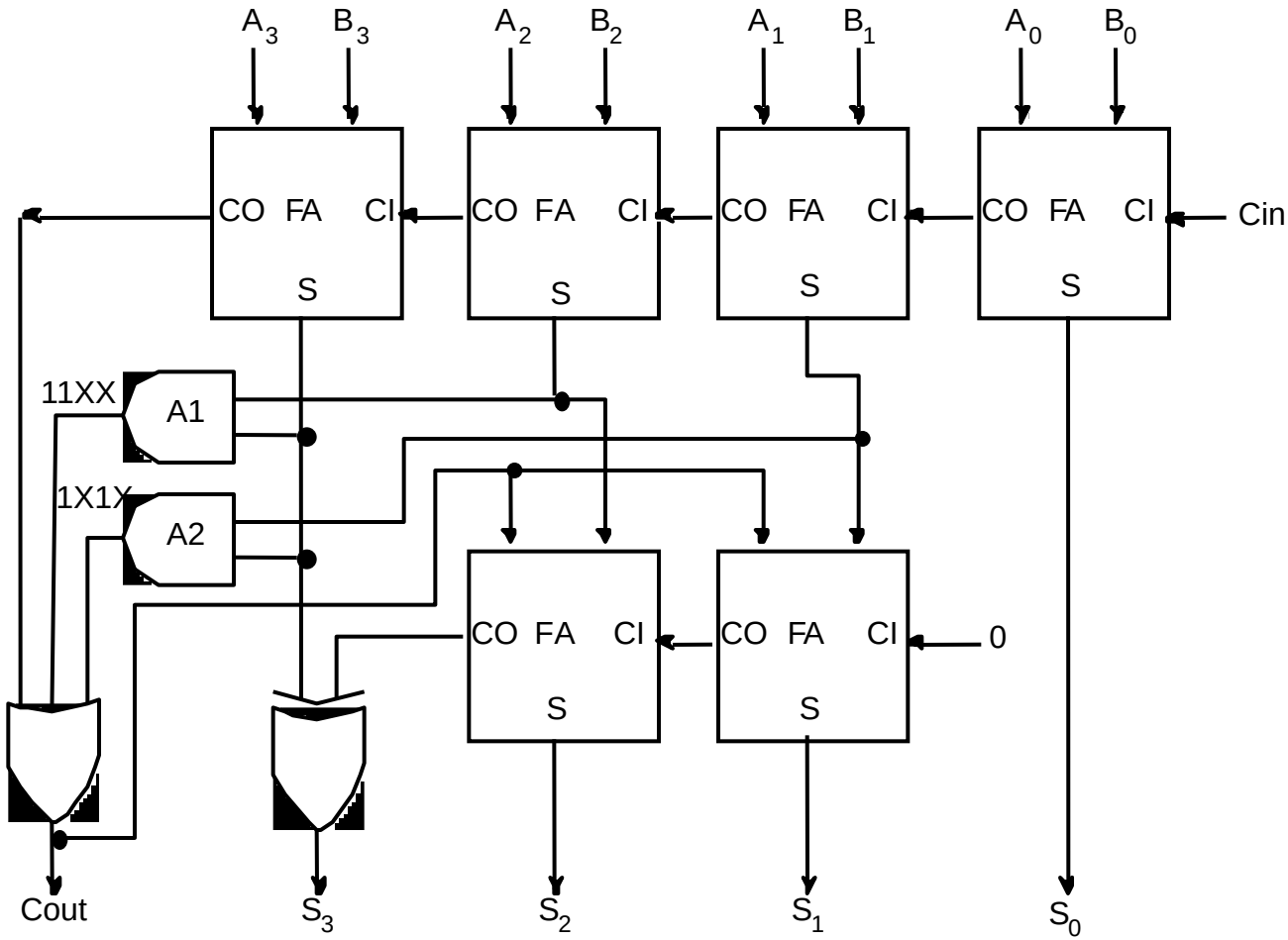

Add 0110 to sum whenever it exceeds 1001 (11XX or 1X1X)